

Journal of Global Business and Management Review
e-ISSN: 2685-3426
https://journal.uib.ac.id/index.php/jgbmr/

ANALYSIS OF FINANCIAL LITERACY, EDUCATION LEVEL ON FINANCIAL TECHNOLOGY GEN Z, MEDIATED BY SELF- EFFICACY

Erna Apriani[1*], Abdul Latif[2], Indra Permana[3], Akfika Rizky Sabilla[4]
[1,2,3] Faculty of Economics and Business, Universitas Pelita Bangsa Indonesia
[4]Faculty of Economics and Business, Universitas Insan Pembangunan Indonesia, Indonesia

Article's Information

DOI:
10.37253/jgbmr.v7i2.11287

e-ISSN:
2685-3426

EDITORIAL HISTORY:
SUBMISSION: 2025-08-28
ACCEPTED: 2025-12-16

CORRESPONDENCE*:
ernaapriani@pelitabangsa.ac.id

AUTHOR'S ADDRESS:
Jl. Inspeksi Kalimalang No.9, Cibatu, Cikarang Sel., Kabupaten Bekasi, Jawa Barat 17530

ABSTRACT

This study aims to analyze the direct role of financial literacy and education level on financial technology, secondly to analyze the direct influence of financial literacy and education level on self-efficacy, thirdly to analyze the direct influence of self-efficacy on financial technology, and fourthly to analyze the indirect influence of financial literacy and education level on financial technology through the mediation of self-efficacy. The sample was 100 Generation Z individuals in Bekasi Regency, selected using purposive sampling. The data analysis method in this study was associative causality through a quantitative approach. The data analysis technique used is SEM-PLS (Structural Equation Modeling-Partial Least Squares) on financial literacy, education level, financial technology, and self-efficacy as a mediating variable. The study results show that financial literacy does not affect financial technology. However, financial literacy has a significant effect on self-efficacy. Education level does not affect financial technology, but education level significantly affects self-efficacy. Self-efficacy mediates educational level and financial technology. The practical implications of this study related to financial literacy and education are that they increase Gen Z's self-efficacy in using financial technology (fintech), which affects their ability to manage finances effectively, avoid financial problems, and access appropriate financial products.

Keywords: *financial technology, financial literacy, educational level, self-efficacy, gen z*

INTRODUCTION

Digital technology continues to evolve and is increasingly unavoidable due to its rapid development and continuous innovation. The digital economy has great potential to become the root of financial technology development as a factor in the distribution, production, and use of goods and services. Various aspects of life, especially in finance, are developing rapidly, accompanied by internet usage reaching 66.48% of the Indonesian population accessing the internet in 2022 (Sam-Abugu et al., 2025).

Financial literacy and financial technology (fintech) have a mutually reinforcing relationship; high financial literacy improves individuals' ability to use fintech wisely, while fintech is a tool that expands access to financial services and education, including for those who previously did not have access to banking services (Song et al., 2025). Good financial literacy encourages responsible and effective use of fintech for personal financial management, investment, and other financial decisions, while fintech simplifies and accelerates these processes, making communities more financially educated and included (Bani Atta, 2025).

The phenomenon linking education levels and financial technology (fintech) shows that higher education correlates with better financial literacy, thereby encouraging wiser use of fintech for financial planning and management. However, the convenience offered by fintech can also trigger consumptive behavior if it is not balanced with adequate education and control, both for individuals with high and low levels of education (Kusuma, 2020). The phenomenon of self-efficacy in relation to financial literacy, education level, and financial technology (fintech) shows that Gen Z's belief in their ability to manage young people's finances is a key factor (Restianti et al., 2022). This effect is reinforced by higher education levels and the availability of financial technology, where self-efficacy can improve existing financial literacy and encourage the adoption of fintech, which ultimately influences financial management behavior, especially since education levels in West Java are still relatively low.

People with higher levels of education can more easily adapt to new digital-based products and services. Conversely, (Rahmatika et al., 2024) indicate that individuals with lower levels of education do not hinder the use of fintech services. Therefore, education alone is insufficient to help people use financial technology. In Indonesia, Generation Z is the largest user of fintech services. Gen Z has been introduced to technology from birth to the present. Gen Z uses technology to facilitate transactions, such as digital transaction services to order goods and snacks, buy and sell goods, and pay for and order transportation services via smartphones (Deviana et al., 2025).

Meanwhile, financial confidence is a supporting factor for individuals to be more prudent in managing their finances. According to (Rusanda et al., 2024), financial confidence is defined as an individual's belief in their ability to achieve financial goals and is influenced by several factors (Ramadhani & Yurniwati, 2025). From this, the financial confidence of Gen Z in Bekasi Regency is still relatively low despite the high income level compared to other areas in West Java, and there has been no previous research that uses financial confidence in a mediation model to analyze Gen Z fintech in Bekasi Regency.

LITERATURE REVIEW

TAM (Technology Acceptance Model)

The TAM (Technology Acceptance Model) theory explains how users accept and adopt technology, focusing on two main factors: perceived usefulness (how useful the technology is) and perceived ease of use (how easy the technology is to use) (Bani Atta, 2025). This model predicts that higher

technology acceptance occurs when users believe the technology will improve their performance and require less effort to use. This study focuses on the use of financial technology by Gen Z, the generation born in the 5.0 era.

Financial Technology

Financial technology is a combination of finance and technology that originated from innovations that emerged as technology became more sophisticated, utilizing advanced technological assistance. According to (Alawi et al., 2020), financial technology is a financial service that stems from global progress. Technology can facilitate financial transactions that typically require face-to-face meetings, but can now be done online anytime and anywhere. This is possible due to supporting technology that helps business activities become more modern and practical, namely, financial technology. In addition, financial technology is a practical and reliable means of conducting financial activities, making it a tool in the financial sector (Becha et al., 2025).

Financial Literacy

Financial literacy is assessed based on knowledge and expertise in financial decision-making and managing price ranges to achieve financial success (Drama & Senou, 2025). Literacy is defined as understanding and expertise that play an important role in meeting the needs of life in a democratic society. Therefore, literacy can be categorized in various ways, such as politics, economics, culture, and the environment. Financial literacy has a long-term goal for all levels of society to improve the literacy skills of individuals who lack literacy, to become skilled in literacy, and to increase the utilization of financial products and services (Radianto et al., 2025).

Level of Education

An individual's level of education can be used as a benchmark for the extent of their knowledge of financial management, as those with a higher level of education are considered to be more adept at making financial decisions, managing finances, and planning finances by utilizing their existing knowledge. The higher a person's level of education, the more prudent they are likely to be in taking action and organizing their thoughts, as well as having a sense of responsibility for their duties. Various factors are related to education level, including the education sector and standards. This shows that formal education can be used as capital for each individual with the knowledge they have acquired, such as logical thinking, theory, analysis, skills, and character building (Setiawan et al., 2025).

Self-Efficacy

Self-efficacy is the level of confidence each individual has in their own skills when carrying out an activity (Savithri & Rajakumari, 2025). Self-efficacy is a sense of confidence related to financial decision-making skills. Therefore, self-efficacy measures a person's self-confidence when carrying out financial activities. Individuals with high self-efficacy can overcome complex problems and bounce back quickly from failure. This benefit proves that these individuals are motivated to take action to achieve their predetermined goals. Conversely, individuals with low self-efficacy often feel less confident and less skilled when facing complex tasks, leading to decreased motivation and results (Amaral et al., 2024). The higher the self-efficacy, the better the person's financial behavior. The following are hypotheses formulated to examine the role of each research variable in relation to Gen Z's financial technology:

H1: Financial literacy has a significant effect on financial technology.

H2: Financial literacy has a significant effect on self-efficacy.

H3: Education level has a significant effect on financial technology.

H4: Education level has a significant effect on self-efficacy.

H5: Self-efficacy has a significant effect on financial technology.

H6: Self-efficacy mediates the relationship between financial literacy and financial technology.

H7: Self-efficacy mediates the relationship between education level and financial technology.

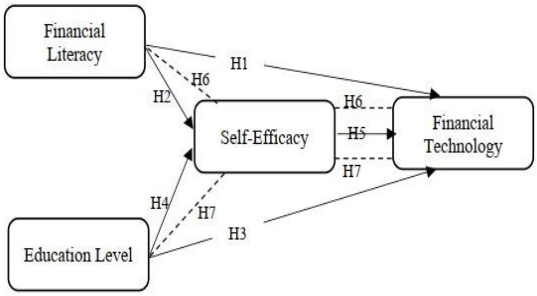

Figure 1. Research Design

METHODS

The research conducted is categorized as associative causality research. Associative causality is a quantitative method for finding the relationship between two or more variables: Financial Literacy and education level as independent variables, Financial Technology as a dependent variable, and Self-Efficacy as a mediating variable. According to (Arikunto, 2019), the population is the object and subject within the scope of generalization, with characteristics and quantities determined by the researcher in researching and drawing conclusions. The sample in this study consists of Gen Z who are already working, focusing on the three largest industrial areas in West Java, namely Bekasi. The sampling technique used in this study was an online and direct questionnaire and interviews using the Sampling method. The sample selection technique was based on data on workers working for more than 15 (fifteen) years in the Bekasi Regency statistical data, with a purposive sampling of 100 respondents.

The data analysis method applied to examine the research variables used the SEM (Structural Equation Modeling) method, which was run through the SmartPLS program. SEM is a multivariate statistical method that combines factor analysis and regression (correlation), designed to examine the relationships between variables in a model, whether between indicators and their constructs or between constructs. According to (Gujarathi, 2022), SEM (Structural Equation Modeling) is a statistical method that can directly examine the structure between hidden variables and their indicators, latent constructs with one another, and measurement errors. SEM can analyze several dependent and independent variables directly against research hypotheses.

RESULTS

Outcome Model Results

Validity Test Results

Table 1. Extracted Average Variance (AVE) Test Results

	Average Variance Extracted (AVE)
Financial Literacy	0.502
Financial Technolgy	0.638
Self - Efficacy	0.706
Level of Education	0.772

Source: (SmartPLS, 2025)

The description in Table 1 shows the Average Variance Extracted (AVE) of the Financial Literacy variable (X1) at 0.502, the Education Level variable (X2) at 0.772, and Self-Efficacy as the mediator variable (Z) at 0.706, and finally Financial Technology (Y) is 0.638, so it can be concluded that the research variables have an AVE value > 0.50 and can be considered valid.

Reliability Test Results

Table 2. Cronbach Alpha Test Results

	Cronbach's Alpha
Financial Literacy	0.799
Financial Technolgy	0.855
Self - Efficacy	0.896

Level of Education	0.926

Source: (SmartPLS, 2025)

The description in Table 2 can be underlined that Financial Literacy (X1) has a Cronbach alpha value of 0.799 or > 0.70, which means it has a high level of reliability. Education Level (X2) has a value of 0.926 or > 0.70, which means it also has a high level of reliability. Financial Technology (Y) as a dependent variable has a value of 0.855 or > 0.70, which means it also has a high level of reliability. The mediator variable, Self-Efficacy (Z), has a value of 0.896, which is > 0.70, meaning that this variable also has a high level of reliability.

Table 3. Fit Model (Standardized Root Mean Square Residual)

	Estimated Model
SMSR	0.099

Source: (SmartPLS, 2025)

In Table 3, the results of the model fit with SMSR (Standardized Root Mean Square Residual) show that the estimated model value of 0.099 is below 0.10 and above 0.08, indicating that the model has a good model fit.

Inner Model Results

R Square Test Results

Table 4. R Square Test Results

	R Square	Adjusted R Square
Financial Technolgy	0.545	0.530
Self - Efficacy	0.613	0.605

Source: (SmartPLS, 2025)

The information in Table 4 shows that the R-Square value for Financial Technology is 0.545, which indicates that this model has a moderate correlation, where Financial Literacy and Education Level influence 54.5% of Financial Technology. In comparison, the remaining 45.5% is influenced by other variables that have not yet been studied. Furthermore, the mediating variable of Self-Efficacy mediates Financial Literacy and Education Level towards Financial Technology, which has an R-Square of 0.613, indicating that this model has a 61.3% correlation with the related variables.

Bootstrapping Test Results

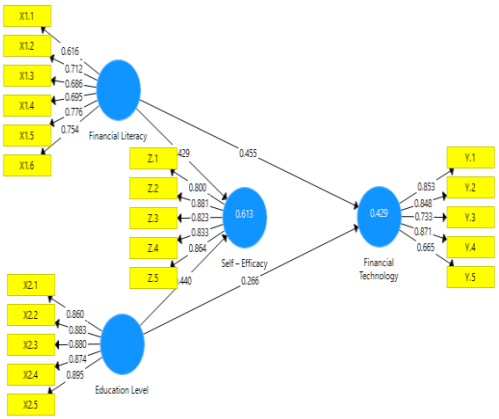

Figure 2. Bootstrapping Test Results
Source: (SmartPLS, 2025)

Based on the information shown in the figure above, it shows the results of hypothesis testing that has been carried out to understand the influence of one variable on another variable. A variable can be said to have an influence if its P Value is < 0.05 or 5%. However, if the P Value is > 0.05 or 5%, then the variable can be said to have no impact on other variables.

Path Coefficient Test Results

Table 5. Path Coefficient Test Results

	Sample Original (O)	T-Statistic	P Values
FL → FT	0.209	1.743	0.084
FL → SE	0.428	5.411	0.000
SE → FT	0.566	4.901	0.000
EL → FT	0.014	0.111	0.912
EL → SE	0.440	4.624	0.000
FL → SE → FT	0.242	4.224	0.000
EL → SE → FT	0.249	2.901	0.005

Source: SmartPLS (2025)

The information in Table 5 leads to the following conclusions:

Financial Literacy and Financial Technology have P-values of 0.084, greater than 0.05. Therefore, there is no influence

between Financial Literacy and Financial Technology. Financial Literacy on Self-Efficacy obtained a P Value of 0.000, which is less than 0.05; therefore, there is an influence between Financial Literacy and Self-Efficacy. Self-Efficacy on Financial Technology obtained a P Value of 0.000, which is less than 0.05; therefore, it can be concluded that there is an influence between Self-Efficacy and Financial Technology. The level of education on financial technology obtained a P-value of 0.912, which is greater than 0.05; therefore, it can be concluded that there is no influence between the level of education and financial technology. The P-value for the relationship between education level and self-efficacy was 0.000, greater than 0.05. Therefore, there is a relationship between education level and self-efficacy. Financial Literacy on Financial Technology mediated by Self-Efficacy obtained a P Value of 0.000, which is less than 0.05; therefore, it can be concluded that there is an influence between Financial Literacy on Financial Technology and Self-Efficacy as a mediator. The relationship between Education Level and Financial Technology mediated by Self-Efficacy yielded a P-value of 0.005, less than 0.05. Therefore, there is an influence between Education Level and Financial Technology, with Self-Efficacy as the mediator.

DISCUSSIONS AND CONCLUSIONS

Research shows that financial literacy does not affect financial technology. These results reject the initial hypothesis that financial literacy has a significant effect on financial technology. These findings are consistent with previous research by (Setiawan et al., 2025), which states that financial literacy does not affect financial technology. Financial literacy does not directly affect financial technology. Financial literacy does not have a significant effect on financial technology (fintech) because other factors such as lifestyle, income level, and access to information have a stronger influence on financial behavior than financial literacy alone. Additionally, different studies have produced varying conclusions; some have found a significant influence, while others have not, indicating that results may depend on the research subjects, methodology, and context. As in this study, the small scope of Gen Z in Bekasi Regency cannot generalize the research results.

This study shows that financial literacy affects self-confidence, a result that is consistent with the initial hypothesis that financial literacy has a significant effect on self-efficacy. This result is in line with the findings of (Restianti et al., 2022; Deviana et al., 2025) that financial literacy has a significant effect on a person's self-efficacy in financial decisions. Financial literacy has a significant effect on self-efficacy because good financial knowledge gives individuals the confidence and skills to manage money, make wise financial decisions, and reduce anxiety when facing financial problems. Increased financial literacy directly impacts increased financial self-efficacy, or confidence in managing finances. This is the case with Gen Z in Bekasi Regency, who have sufficient access to knowledge in financial literacy.

This study shows that self-efficacy influences financial technology. These results are in line with the initial hypothesis that self-efficacy has a significant effect on financial technology. Self-efficacy has a significant effect on the use of financial technology (fintech) because self-confidence in one's ability to manage finances encourages Gen Z to dare to try, utilize, and adopt fintech services, as well as overcome technical obstacles so that they can reap the financial benefits offered by this technology. These results are in line with findings from (Restianti et al., 2022) that people with good financial knowledge are confident in managing their finances through financial technology. Financial knowledge provides a basis for understanding the risks,

benefits, and workings of various fintech services, such as digital wallets, investment applications, or online banking.

This study shows that education level does not affect financial technology. These results are not in line with the initial hypothesis that education level has a significant effect on financial technology. Education level does not always affect fintech, but its impact is more complex and often related to financial literacy, not just educational qualifications. A high level of education can actually improve financial literacy and financial behavior, but a lack of understanding of financial literacy can hinder the use of fintech even among highly educated individuals. These results are in line with findings (Bani Atta, 2025) showing that individuals with higher levels of education are not always better at managing their finances using financial technology. On the other hand, individuals with lower levels of education do not always demonstrate poor financial management. This phenomenon shows that although formal education can provide greater access to information about various financial technology products, not all individuals with higher levels of education can automatically apply this knowledge in their daily financial decision-making practices.

The level of education has a significant effect on self-efficacy because education provides experiences of success (mastery experiences), vicarious experiences through social learning, and develops problem-solving skills and resilience that build self-confidence. Education also increases motivation, self-management skills, and broadens awareness of values that support self-confidence in achieving goals. These results are in line with findings (Rahmatika et al., 2024) that highly educated individuals are often more confident in managing finances, making financial decisions, and using financial technology wisely. Therefore, one of the factors that influence people's confidence, especially Generation Z, is the level of education, which is one of the most active users of financial technology and has increasingly high demands in the financial sector, given the development of the modern era towards Indonesia's golden age in 2045.

This study found that education level affects self-confidence, a result that is in line with the initial hypothesis that education level has a significant effect on self-efficacy. This study shows that self-efficacy mediates the relationship between financial literacy and financial technology, a result that is in line with the initial hypothesis that self-efficacy mediates the relationship between financial literacy and financial technology. (Savithri & Rajakumari, 2025) reveals that self-confidence strengthens the impact of financial literacy on financial technology. Good financial literacy can result in high self-confidence, or self-efficacy, which enables individuals to use financial technology more wisely.

Self-efficacy mediates the relationship between education level and financial technology (fintech) because higher education levels increase financial literacy and self-efficacy, which in turn makes individuals more confident in using and utilizing fintech for their financial purposes. Thus, education becomes the foundation for building self-efficacy that enables more effective use of fintech. (Opinion Amaral et al., 2024) argues that education can broaden understanding in utilizing financial technology through self-confidence. This shows the role of education level in strengthening the ability to use financial technology by increasing individual self-confidence or self-efficacy.

The research and data analysis results show that the R-Square value for Financial Technology is 0.545, which indicates that this model has a moderate correlation, where Financial Literacy, Education Level, and Self-Efficacy influence 54.5% of Financial Technology. Furthermore, the mediation variable of Self-Efficacy has an R-Square of 0.613, which indicates that this model has a 61.3% correlation with the related variables.

The results of the research hypothesis found that Financial Literacy does not affect Financial Technology, then Financial Literacy has a significant effect on Self-Efficacy, and Self-Efficacy has a significant effect on Financial Technology. Furthermore, Education Level does not affect Financial Technology, and Education Level significantly affects Self-Efficacy. Then, Financial Literacy and Financial Technology are mediated by Self-Efficacy as a mediator, and finally, Education Level and Financial Technology are mediated by Self-Efficacy as a mediator.

The implications of this study are that financial literacy and higher levels of education tend to encourage better financial management and positive financial behavior, while self-efficacy (self-confidence) influences an individual's ability to make wise financial decisions and face financial challenges. All of these are important for the responsible and effective use of financial technology (fintech). Individuals with high financial literacy and self-efficacy can better utilize fintech to achieve their financial goals, reduce the risk of consumptive behavior or online loan traps, and achieve future economic well-being.

The implications for fintech users are increased adoption and security, as users with high financial literacy tend to better understand the risks and benefits of fintech, boosting their confidence to use new services and avoid illegal investment scams. For financial institutions, this means innovation in products and services, as financial institutions can develop fintech products and services that are more innovative, affordable, and tailored to the needs of increasingly financially literate users. For education, the integration of financial literacy and technology into educational institutions can incorporate financial literacy and fintech education into the curriculum, from elementary to university level, to equip future generations with relevant skills.

LIMITATIONS

Several limitations in this study must be taken into consideration. The first limitation is that the sample size was small, with 100 Gen Z respondents in Bekasi Regency selected using purposive sampling. Therefore, the results of this study cannot be generalized, as the sample consisted of Gen Z respondents who use financial technology in a small area in Bekasi Regency. This may limit the results of the study's application, especially to the wider Indonesian population, which consists of various generations. The second limitation is the observation site, which is Bekasi Regency. This limitation means that the sample collected is relatively small, covering only Bekasi Regency.

Although the factors influencing Gen Z's financial technology have been explored, particularly in this study, other factors that may be related have not been fully included, and the development of mediators other than education level has not been conceptualized in this study. Therefore, it is necessary to develop other variable factors and mediators that influence Gen Z's financial technology. In future research, it is recommended to expand the scope of the study to include Millennials, as well as other observation sites besides Bekasi Regency, and other factors related to financial technology, so that the scope is broader and new findings can be discovered in understanding the limitations of this study and the new findings, as well as the development of further research in the refinement and expansion of the study.

REFERENCE

Alawi, N. M., Asih, V. S., & Sobana, D. H. (2020). Pengaruh Literasi Keuangan dan Inklusi Mahasiswa UIN Sunan Gunung Djati Bandung Terhadap Penggunaan Sistem Financial Technology. *Jurnal Maps*

(Manajemen Perbankan Syariah), *4*(1), 36–44.

Amaral, L. B. B., Iramani, R., & Pertiwi, T. D. (2024). Studi financial literacy, financial self-efficacy, financial behavior dosen Universidade da Paz Timor Leste. *Journal of Business & Banking*, *14*(1), 113–132.

Arikunto, S. (2019). *Prosedur Penelitian*. Rineka Cipta.

Bani Atta, A. A. (2025). Financial technology platforms and enhancing SME financing in Jordan. *Discover Sustainability*, *6*(1). https://doi.org/10.1007/s43621-025-01345-z

Becha, H., Kalai, M., Houidi, S., & Helali, K. (2025). Digital financial inclusion, environmental sustainability and regional economic growth in China: insights from a panel threshold model. *Journal of Economic Structures*, *14*(1). https://doi.org/10.1186/s40008-025-00347-4

Deviana, D., Malini, H., & Syahputri, A. (2025). Peran Financial Self-Efficacy dalam Hubungan antara Pendapatan, Literasi Keuangan, dan Perilaku Keuangan Mahasiswa di Indonesia. *ECo-Buss*, *8*(1), 276–294.

Drama, B. G. H., & Senou, M. M. (2025). Unraveling the digital technologies and banking inclusion nexus in Sub Saharan Africa: What causality for what heterogeneity? *Discover Sustainability*, *6*(1). https://doi.org/10.1007/s43621-025-01694-9

Gujarathi, D. M. (2022). *Gujarati: Basic Econometrics*. McGraw-hill.

Kusuma, I. N. P. (2020). Pengaruh Literasi Keuangan terhadap Inklusi Keuangan melalui Financial Technology pada UMKM di Bandar Lampung. *Jurnal Manajemen Bisnis Dan Kewirausahaan*, *4*(5), 247–252.

Lestiani, D., & Bahtiar, M. D. (2024). Pengaruh Financial Literacy dan Uang Saku terhadap Perilaku Pengelolaan Keuangan dengan Financial Self Efficacy sebagai Variabel Moderating. *Jurnal Akuntansi Terapan Dan Bisnis*, *4*(1), 78–87.

Radianto, W. E. D., Purwanugraha, H. A., Kristanto, H., Efrata, T. C., & Salim, I. R. (2025). The role of mental accounting and financial attitudes in shaping financial behavior among entrepreneurial students using fintech. *Decision Science Letters*, *14*(1), 123–132. https://doi.org/10.5267/j.dsl.2024.10.008

Rahmatika, A. N., Widyaningsih, B., & Al Qaedah, A. (2024). Pengaruh Literasi Keuangan dan Sikap Keuangan Terhadap Pengelolaan Keuangan Ibu Rumah Tangga Dengan Self Efficacy Sebagai Variabel Intermediasi. *Jurnal At-Tamwil: Kajian Ekonomi Syariah*, *6*(2), 154–175.

Ramadhani, P., & Yurniwati, Y. (2025). Pengaruh Financial Literacy dan Financial Self-Efficacy Terhadap Pengambilan Keputusan investasi di Moderasi Locus of Control. *Equilibrium: Jurnal Ilmiah Ekonomi, Manajemen Dan Akuntansi*, *14*(1), 264–281.

Restianti, R., Sakti, D. P. B., & Suryani, E. (2022). Pengaruh financial behavior, financial literacy, financial technology terhadap keputusan

berinvestasi gen Z. *Jurnal Sosial Ekonomi Dan Humaniora*, *8*(3), 384–390.

Rusanda, A. D., Usuli, S., & Setiawan, A. (2024). Pengaruh Literasi dan Inklusi Keuangan terhadap Kinerja Keuangan dengan Financial Self Efficacy Sebagai Variabel Intervening. *Ekomen*, *24*(1), 45–72.

Sam-Abugu, C., Luo, X., & Wong, B. (2025). The combined role of FinTech innovation and financial literacy in sustainable financial inclusion in Nigeria. *International Review of Economics*, *72*(2). https://doi.org/10.1007/s12232-025-00490-1

Sampe, F., Irawan, J. L., Raprayogha, R., Ernayani, R., Fitria, N., Ayuandani, W., Fiddah, A. I., Yanthiani, L., Levany, Y., Ruhliandini, P. Z., & Latif, A. (2023). *Manajemen Keuangan Perusahaan Lanjutan*. Sada Kurnia Pustaka. https://books.google.co.id/books?id=brGqEAAAQBAJ

Savithri, M., & Rajakumari, D. (2025). Analysis of Investment Factors and Decisions among Generation Z and Generation X in Indian Capital Market. *International Journal of Economics and Financial Issues*, *15*(1), 337–344. https://doi.org/10.32479/ijefi.17526

Setiawan, B., Triana, D., Al Azizah, U. S., Wahyuni, A. S., Victor, V., Nathan, R. J., & Fekete-Farkas, M. (2025). Financial technology (Fintech) innovation and financial inclusion: comparative study of urban and rural consumers post-Covid-19 pandemic. *Journal of Innovation and Entrepreneurship*, *14*(1). https://doi.org/10.1186/s13731-024-00452-x

Song, X., Qin, X., Wang, W., & Man Li, R. Y. (2025). Financial inclusion, technologies, and worldwide economic development: A spatial Durbin model approach. *Journal of Finance and Data Science*, *11*. https://doi.org/10.1016/j.jfds.2025.100155